DECENTRALISED SYSTEM SCHEMATIC

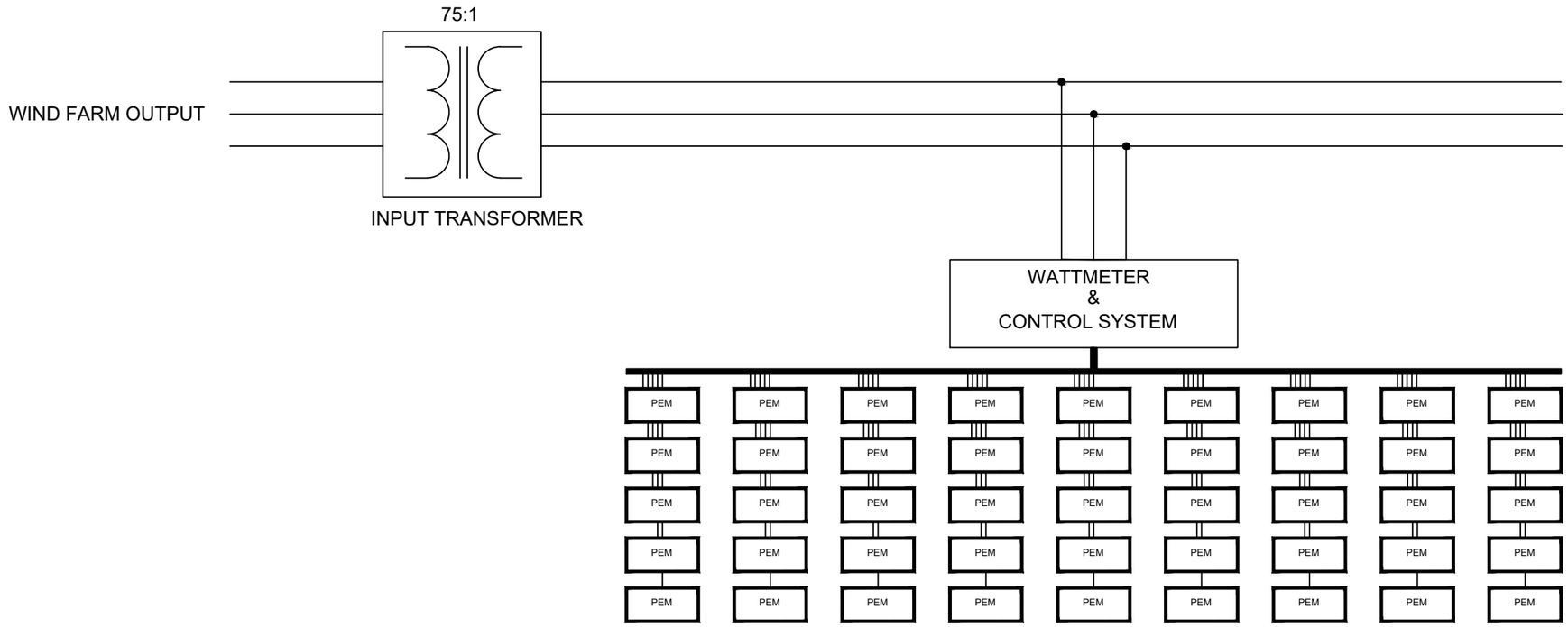

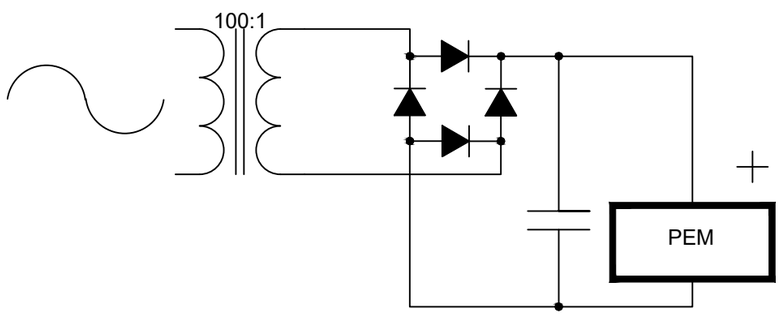

FULL WAVE RECTIFIER DETAIL

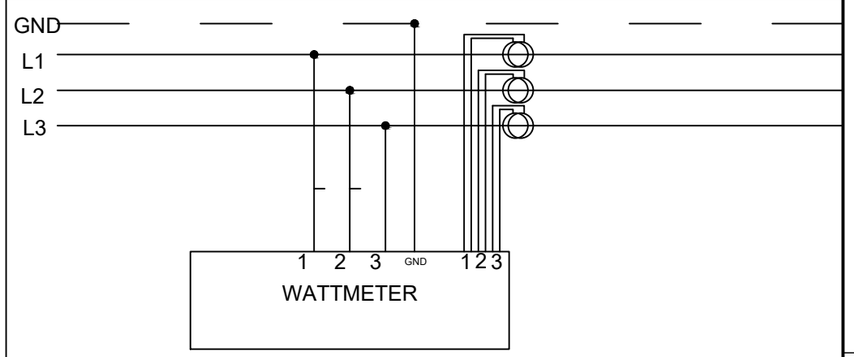

WATTMETER CONNECTION

NOTES:

1. ~ signal represents AC current, and +/- represents DC current.

NO.	REFERENCED DOCUMENTS & DRAWINGS	REV.	DATE

DRAWN RAUL RIBEIRO	19/04/2020	
CHECKED		TITLE POWER AND CONTROL CIRCUITS FOR INTEGRATED PROCESSING PLATFORM
APPROVED		
		SIZE A3 / DWG NO DRAWING NO. 1 / REV A
		SCALE / SHEET 1 OF 1